A Study on CubeSat Design for Use in Space-Based Quantum Key Distribution

M.Phys Year 5 Research Project (B21RX)

Heriot-Watt University

Submission date: 06/04/2023

Student: Faris Redza (H00314290)

Supervisor: Prof. A. Fedrizzi

Student Declaration of Authorship

Course code and name:	Research Project (B21RX)
Type of assessment:	**Individual**
Coursework Title:	Project Report
Student Name:	Faris Redza
Student ID Number:	H00314290

Declaration of authorship. By signing this form:

- **I declare** that the work I have submitted for individual assessment OR the work I have contributed to a group assessment, is entirely my own. I have NOT taken the ideas, writings or inventions of another person and used these as if they were my own. My submission or my contribution to a group submission is expressed in my own words. Any uses made within this work of the ideas, writings or inventions of others, or of any existing sources of information (books, journals, websites, etc.) are properly acknowledged and listed in the references and/or acknowledgements section.

- I confirm that I have read, understood and followed the University's Regulations on plagiarism as published on the University's website, and that I am aware of the penalties that I will face should I not adhere to the University Regulations.

- I confirm that I have read, understood and avoided the different types of plagiarism explained in the University guidance on Academic Integrity and Plagiarism

Student Signature *(type your name):* *Faris Redza*

Date: *06/04/2023*

Copy this page and insert it into your coursework file in front of your title page.
For group assessment each group member must sign a separate form and all forms must be included with the group submission.

1 Summary of Related Work

A previous project was carried out with the aim of designing a CubeSat subsystem to carry out QKD experiments. This project started the initial design work on which the work carried out in this paper would be based on. This previous project also had a large focus on experiments designed to violate Bell's inequality and to conduct a quantum state tomography. The project produced a CAD model of the QKD system, but suffered from numerous flaws in both the design and the general quality of the model, which prevented it from being 3D printed. Figures showing this earlier design can be found in Appendix D. An additional summer project was carried out to continue working on the earlier design. This project focused on improving the quality of the model, fixing many errors and bringing the model closer to a state where it could be feasibly printed. Some of the general design flaws were rectified, however, the model still suffered from problems detailed in 4.1. Figures showing this version of the satellite design can be found in AppendixE. The work carried out in this paper differs in that it involved a complete rebuild of the CAD model from the ground up, while also investigating optimisation parameters using a computational model. The current CAD model shares no parts or files with the previous models.

Abstract

Quantum key distribution (QKD) is a communication method that utilises the fundamental properties of quantum mechanics to provide enhanced security over traditional classical-based key distribution techniques. Entanglement-based QKD can be used to provide secure keys for encrypted communications, that if intercepted, would leave detectable anomalies due to the observer effect. Challenges faced when creating long distance ground-based QKD networks have prompted research into a satellite-based network, one that could enable secure communications on a global scale. Taking advantage of the cost-effective nature of the CubeSat platform, a study for a potential future satellite-based qkd system has been conducted, building off of a previous design and involving a 3D printed prototype chassis, preliminary experimental work, and a computational model investigating optimisation parameters for such a system.

Contents

1 Summary of Related Work **3**

2 Introduction **6**

2.1 Quantum Key Distribution 6

2.2 Satellite-based QKD 6

2.3 Entangled Photon Source 7

2.4 Design Constraints 7

3 Materials and Methods **8**

3.1 Satellite Design 8

3.2 Computational Modelling 10

4 Results **12**

4.1 CAD Model 12

4.2 Optical Bench 14

4.3 Computational Model 15

5 Discussion **15**

6 Conclusion **16**

7 Acknowledgements **19**

A Risk Assessment **20**

B Gannt Chart **21**

C Additional Design Images **22**

D Year 4 Project CAD Model **23**

E Summer Project CAD Model **24**

2 Introduction

2.1 Quantum Key Distribution

Quantum Key Distribution (QKD) offers a method of creating a secure communication system that relies on the fundamental properties of quantum mechanics. It enables two parties to share a secret key to encrypt a communication channel. These keys rely on the observer effect to provide security. Any attempt to intercept and measure them would alter their state, thereby leaving alerting the two parties of an eavesdropper. Two main approaches exist, prepare-and measure protocols, and entanglement-based protocols. Entanglement-based QKD has numerous advantages over the former. An entanglement-based system can operate on a zero trust model[1]. This results in higher overall levels of security, since a network would not be at risk in the event that part of it was compromised one part[2]. The second advantage is the ability to utilise entanglement swapping. Entanglement swapping is a phenomenon where entanglement can be transferred (known as teleportation) to two photons that were produced independently of each other, having never previously interacted. This could prove to be a useful feature to aid in integrating devices into a future network[3]. Building a QKD network however, presents multiple challenges that must be overcome, with the main limitation being the range and scale of a potential network.

2.2 Satellite-based QKD

Transmitting single photons over fibre results in losses, which has been shown to limit the distance a network can operate at to a few hundred kilometres[4]. A solution to this problem is creating a satellite-based network, which could allow the transmission of entangled photons on a global scale[5–7]. Various methods exist, but one of particular interest is the approach where the satellite itself generates the entangled photons, and then performs double-downlink, transmitting photons from an entangled pair to two remote ground stations. This method has the advantage of being able to operate in a zero-trust configuration[1].

Satellite-based QKD began with the successful deployment of the Micius satellite[8], which demonstrated the ability to generate entangled photon pairs aboard the satellite, along with distributing them to two ground observatories separated by a distance of 1,120 km. The satellite employed bulk nonlinear crystals to perform SPDC for the entangled photon generation[9]. Although the satellite successfully demonstrated quantum communication in orbit, it lacks the scalability de-

sired to conduct cost-effective research and to construct a space-based QKD network[10]. This is due to the size and mass of the satellite, which increases both the cost of construction and the cost of launching it.

Research into utilising CubeSats for QKD has become a major interest as of late[1,10]. CubeSats are a class of miniaturised satellites based around 10 cm^3 modules, or 1 U, which can be combined and stacked to create larger satellites. These satellites provide an entry level system to conduct research in low Earth orbit, as they often utilise commercial off-the-shelf parts and can be launched alongside other payloads in order to reduce costs.

2.3 Entangled Photon Source

To create entangled photons, a Sagnac interferometer can be used. This design has the advantage of being very stable[11], which is a desirable trait for use in satellites due to it being virtually impossible to make adjustments to the system when it is in orbit. The sagnac would utilise a nonlinear crystal in the type-0 configuration to perform spontaneous parametric down conversion (SPDC). SPDC is a nonlinear optical process in which a photon of a higher energy decays into a pair of photons of lower energy[12]. SPDC sources can be utilised for both prepare-and-measure protocols and entanglement-based protocols[13]. For the latter, polarisation entanglement between two modes of the light emitted from a SPDC source can be used. The process is spontaneous as there are no input signal and idler photons to stimulate the process, and is parametric due to the fact that the beginning and ending quantum states of the system are identical, i.e. their energy and momentum are conserved. Non-parametric processes differ in that some of the energy is lost in the process in the form of thermal energy. It is a $\chi^{(2)}$ based nonlinear optical effect that uses phase-matching to achieve simultaneous energy and momenta conservation[14]. As a consequence, only certain frequencies can be phase-matched since the refractive index changes with frequency[15]. To achieve phase-matching, a birefringent nonlinear crystal is used, as its refractive index changes with polarisation[16]. The type-0 configuration produces a photon-pair that share the same polarisation with both each other and the pump photon[17].

2.4 Design Constraints

A satellite-based QKD system will be subject to many design constraints, especially when packaging for a cube satellite. A potential QKD satellite placed into low Earth orbit (LEO) would typically have a 90 minute orbital period, of which satellite would only have a window of approx-

imately 15 minutes to transmit to the ground station as it passes overhead. On each orbit, the satellite would endure temperatures as low as -150 °C on the night side and up to 120 °C on the day side. The system being designed must fit in a 2 U module, forming a subsystem of a larger satellite. This provides a limited amount of space to fit and arrange the required components of the payload. The design must also offer some degree of flexibility in order to be compatible with the larger satellite, as the exact method of how the QKD system will be integrated had not been finalised at this time.

3 Materials and Methods

3.1 Satellite Design

The design of the satellite follows the general design established previously (see Appendix D and E), where a sagnac was used as an entangled photon-pair source. The satellite makes use of a 405 nm laser diode, so that down-conversion produces 800 and 810 nm photons. This near-infrared wavelength region is an atmospheric window, and thus has very good transmission due to experiencing limited to minimal absorption. Moreover, there is a good availability of cost-effective silicon-based single-photon detectors with high detection efficiencies (>50 %) and low dark counts in this wavelength region[18].

Unpolarised light from the laser diode passes through a linear polariser, a quarter waveplate, and then a half waveplate, so that the light is diagonally polarised. The light then passes through a 650 nm short-pass dichroic mirror and reaches a polarising beam splitter (PBS), where it is separated into horizontal and vertical components, each travelling through a different arm of the sagnac to pump the crystal from both sides simultaneously, as seen in Fig. 1. The crystal selected for the design is a periodically-poled potassium titanyl phosphate (ppKTP) quasi-phased-matched crystal, that can be used to convert light from one wavelength to another. Phase matching is used to set the photon-pair's polarisation to be equal (type-0) or orthogonal to each other (type-2). Phase matching is also used to determine the photon-pairs' wavelength to be either the same (degenerate) or unique (non-degenerate), and whether they are emitted along the direction of the pump photons (collinear) or at an angle (non-collinear)[12]. The crystal used in this design is type-0 in the non-degenerate case producing photon-pairs collinear to the pump beam. The crystal is mounted in an oven, as degeneracy can be fine-tuned using temperature[19]. Type-0 crystals have the advantage of much higher photon-pair generation[20], and therefore make

a suitable choice for power-limited device. Periodic poling is used to eliminate birefringent walk-off, where the intensity distribution of a beam in an anisotropic crystal propagates in a direction which is slightly different to that of the wave vector[14]. The crystal only generates photon-pairs when vertically polarised light is incident on it. To address this, a half waveplate is situated on one arm, which rotates the polarisation from horizontal to vertical. Each pump photon produces a signal and idler photons at 810 nm and 800 nm. Photons that travel back through the half waveplat are rotated to the horizontal polarisation. The photon-pairs travel through the PBS, and are now reflected by the dichroic mirror. The photons then encounter a second dichroic mirror which reflects the 810 nm photons to one detector while allowing the 800 nm photons to pass through to the other detector. Detectors would be used for testing purposes in this case, the finalised design would make use of a telescope to transmit the entangled photons to ground stations on Earth.

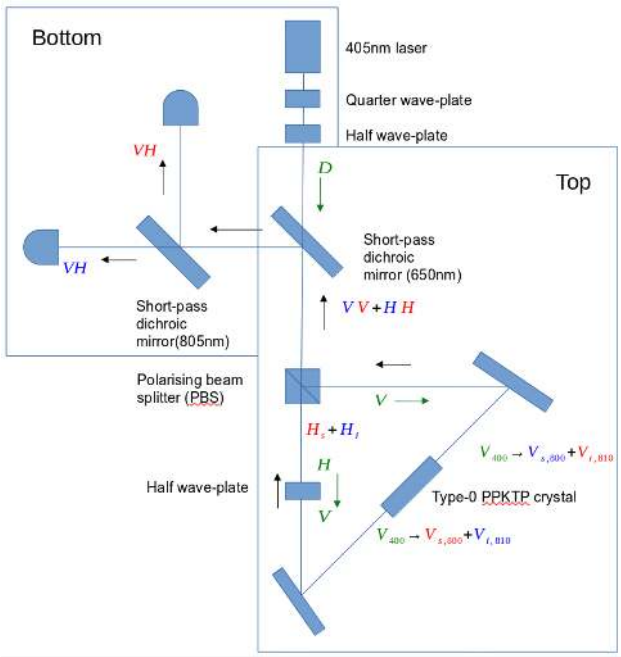

Fig. 1 Layout of entangled photon-pair source: The design utilises a 405 nm laser diode. Unpolarised light from the laser passes through a quarter waveplate and then a half waveplate to obtain diagonally polarised light. The beam than travels through a 650 nm short-pass dichroic mirror to a PBS which splits the light to its horizontally and vertically polarised components, with each travelling through a different arm of the sagnac.

A CAD model of the proposed system was designed, building upon the foundation set by the previous projects. The design follows the same principle as the prior designs, where the components are split into two distinct sections. The 'bottom' section comprises the diode and the single-photon detectors, while the 'top' section houses the sagnac, as outlined in Fig. 1. This

allows the design to be folded in half, thus decreasing the system's footprint, making better use of the available space. It also allows a peltier tile heating element to be installed in the hollow section formed when the two sections, which can regulate the temperature of the system. The software used for the design includes FreeCAD, a free and open source CAD modelling software[21], and GaussianBeam, a Gaussian optics simulator[22]. It was planned for an experimental version of the source to be worked on in tandem with the design work discussed, due to time constraints, only limited testing could be performed.

3.2 Computational Modelling

Optimising the operation parameters of a QKD system is vital in order to achieve high secure key rates, especially for a power-limited CubeSat, where the number of photon-pairs would be low, and losses would be induced when transmitting through the atmosphere from LEO to a ground station. A model was developed to evaluate the amount of achievable keys per second R^{s}, given by the equation

$$R^{\mathrm{s}} \geq q\mathrm{CC}^{m}[1 - f(\delta_b)\mathrm{H}_2(\delta_b) - \mathrm{H}_2(\delta_p)], \tag{3.1}$$

where q is the probability of both channels measuring in the same basis, CC^{m} is the number of measured coincidences, δ_b and δ_p are the bit and phase errors respectively, and H_2 is the binary entropy function

$$\mathrm{H}_2(x) = -x\log_2(x) - (1-x)\log_2(1-x). \tag{3.2}$$

A plot of R^{s} against B can then be used to determine the optimal parameters for the CW-QKD system[23].

The model assumed an idealised CW pump source with a brightness B, which is the average number of entangled photons generated per second. The entangled photons are separated into two channel probabilities with efficiencies η_{A} and η_{B}[23]. The average photon detection rate for these channels, or measured single counts, is

$$S_i^{\mathrm{m}} = B\eta_i, \tag{3.3}$$

where i is the index of the channel. Both photons from a pair must be detected to observe their

polarisation correlation, so the "true coincident counts" becomes

$$\mathrm{CC}^{\mathrm{t}} = B\eta_{\mathrm{A}}\eta_{\mathrm{B}}, \tag{3.4}$$

In a real world experiment, detection of two entangled photons may not be simultaneous. This is caused by several factors, such as differences in the wavelength causing chromatic dispersion when transmitting through fibre; photon coherence length; and the timing precision of the detectors. These can all cause a time delay t_{D} between detecting the first and second photons, giving a Gaussian curve of the number of coincidences per time unit for different relative measurement times, with a FWHM t_{Δ}[24]. Due to asynchronous detection, a coincidence window t_{CC} must be defined to allow for the difference in detection times for the two photons. However, this causes a possibility of confusing correlated and uncorrelated detection events. This leads to a rate of accidental coincidences per second $\mathrm{CC}^{\mathrm{acc}}$, which depends on the measured single counts and the coincidence window, therefore

$$\mathrm{CC}^{\mathrm{acc}} = S_{\mathrm{A}}^{\mathrm{m}} S_{\mathrm{B}}^{\mathrm{m}} t_{\mathrm{CC}}. \tag{3.5}$$

The coincidence window presents a possibility of missing the detection of a true coincidence, i.e. they may fall outside the window. The proportion of the true coincidences inside the window, $\eta^{t_{\mathrm{CC}}}$, must be determined[23]. The aforementioned Gaussian can be modelled as[25]

$$j = \frac{2}{t_{\Delta}}\sqrt{\frac{ln(2)}{\pi}}e^{-\frac{4ln(2)}{t_{\Delta}^{2}}(t-t_{\mathrm{D}})^{2}}. \tag{3.6}$$

Integrating equation 3.6 with $t_{\mathrm{D}} = 0$ gives

$$\eta^{t_{\mathrm{CC}}} = \int_{-t_{\mathrm{CC}}/2}^{t_{\mathrm{CC}}/2} j(t_{\mathrm{D}} = 0)dt = \mathrm{erf}\left[\sqrt{\ln(2)}\frac{t_{\mathrm{CC}}}{t_{\Delta}}\right]. \tag{3.7}$$

The number of measured coincidences can now be found by taking the sum of $\mathrm{CC}^{\mathrm{acc}}$ and the true coincident counts multiplied by $\eta^{t_{\mathrm{CC}}}$,

$$\mathrm{CC}^{\mathrm{m}} = \eta^{t_{\mathrm{CC}}}\mathrm{CC}^{\mathrm{t}} + \mathrm{CC}^{\mathrm{acc}}. \tag{3.8}$$

There may be errors in the polarisation measurements due to factors such as imperfections in the source and polarisation compensation. This value e^{pol}, consists of contributions of the individual polarisation error probabilities e_i^{pol} of each detector i, and is often found experimentally[25]. A

subset of the total number of detection events do not show correlations in accordance with the Bell states. These are the sum of the erroneously measured correlated photons, and an average of $\frac{1}{2}\mathrm{CC}^{\mathrm{acc}}$, giving

$$\mathrm{CC}^{\mathrm{err}} = \eta^{t_{\mathrm{CC}}}\mathrm{CC}^{\mathrm{t}}e^{\mathrm{pol}} + \frac{1}{2}\mathrm{CC}^{\mathrm{acc}}. \tag{3.9}$$

The ratio of CC^{m} and $\mathrm{CC}^{\mathrm{err}}$ gives

$$E = \frac{\mathrm{CC}^{\mathrm{err}}}{\mathrm{CC}^{\mathrm{m}}} = \frac{\eta^{t_{\mathrm{CC}}}\mathrm{CC}^{\mathrm{t}}e^{\mathrm{pol}} + \frac{1}{2}\mathrm{CC}^{\mathrm{acc}}}{\eta^{t_{\mathrm{CC}}}\mathrm{CC}^{\mathrm{t}} + \mathrm{CC}^{\mathrm{acc}}}, \tag{3.10}$$

where E is the quantum bit error rate[23]. This value is an important metric in optimising the performance of the system, and can be controlled by varying t_{CC}. If t_{CC} is decreased, E decreases, since CC^{m} scales more favourably. However, this decreases the total number of usable coincidences, therefore, this value needs to be balanced so that there is an acceptable trade-off between E and the total number of available coincidences that can be used for key creation.

The final parameters to discuss are q, δ_b, and δ_p. In the case that the measurement settings for both channels are identical, $q = \frac{1}{2}$. The model assumes that the noise parameters are independent of the measurement settings, and thus $\delta_b = \delta_p = E$[25]. Equation 3.1 can now be rewritten as

$$R^{\mathrm{s}} = \frac{1}{2}\mathrm{CC}^{\mathrm{m}}\left[1 - 2.1\mathrm{H}_2(E).\right] \tag{3.11}$$

4 Results

4.1 CAD Model

The CAD model presented was completely rebuilt from the ground up in order to address the problems associated with the prior designs. It improves on the previous model by introducing a simplified optical system. The previous versions used a complex set of lenses in order to keep a tight beam path through the system, due to difficulties in finding space in suitable locations to use a simpler design. The prism pair in the prior designs was added to address the possibility of the beam losing its circular shape as it propagates through the system due to using an inexpensive off-the-shelf laser diode. Testing showed that the beam kept a circular shape throughout the entire beam path length, so this component was unnecessary. The new design revised the layout of the system, and space was found to replace the prior version with a 12.5 mm aspheric lens and a 1/2" bi-convex lens. This reduces the number of components

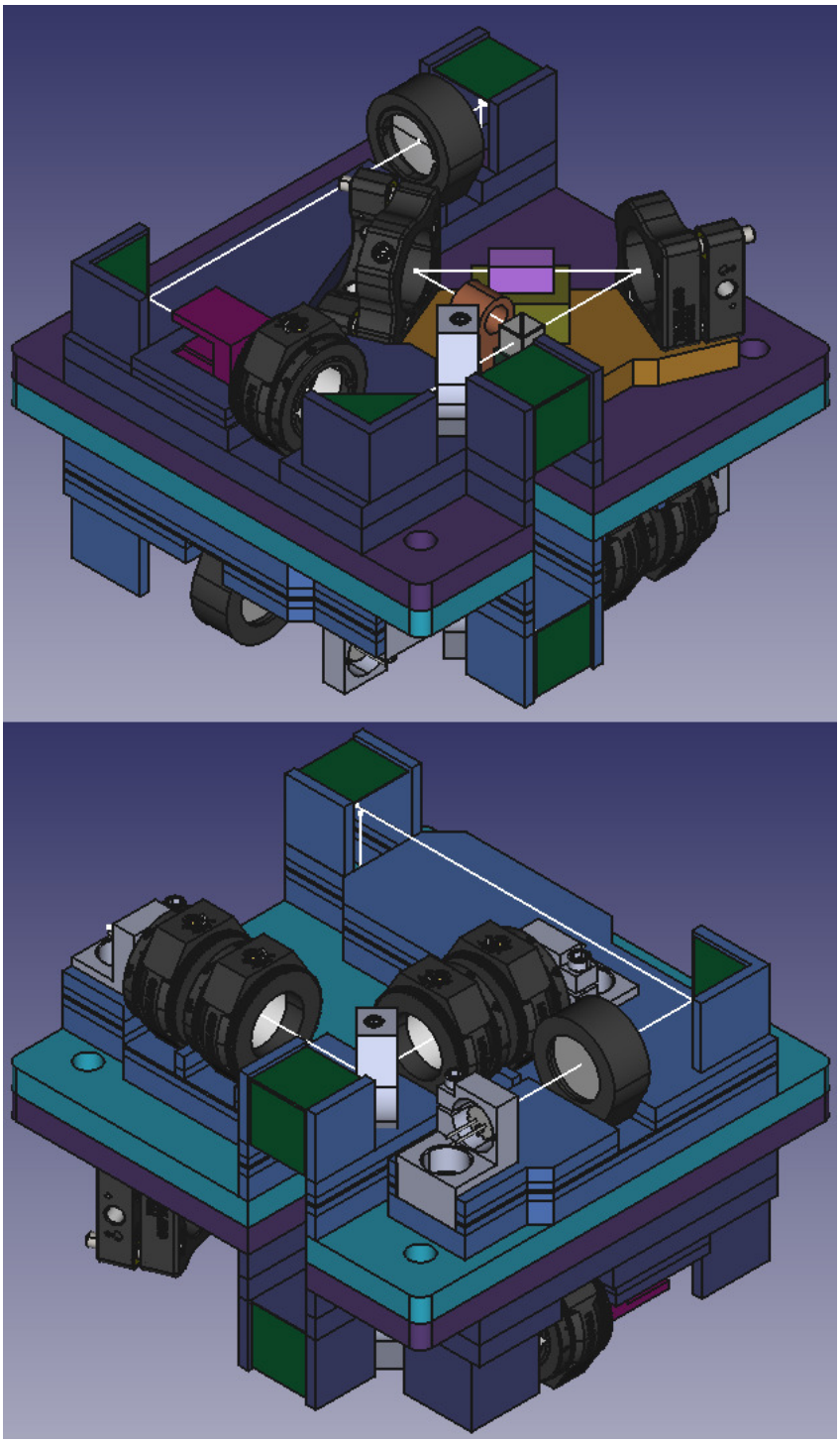

Fig. 2 CAD model of the proposed QKD system: A CAD model of the design was created, iterating from prrevious designs. The new model makes use of a simplified optical setup in order to reduce complexity and reliability. The design fixes errors made in the previous versions, such as conflicting parts and gaps. This design was therefore able to be successfully 3D printed.

required, removing potential points of failure, and making construction and optical alignment of the system easier. Further improvements were made to the rail mounting system. The prior model introduced larger diameter rail mounts to improve its rigidity, but at the cost of cut through more of the structure to provide clearance. The new model revises the entire layout, and positioned the components so that the rails have greater clearance. The model was then 3D printed. The first attempt was unsuccessful, as the printer was unable to print the model as one solid piece. The printing method was then revised, by printing the top and bottom modules separately, which produced a successful print of what a potential QKD CubeSat system would look like.

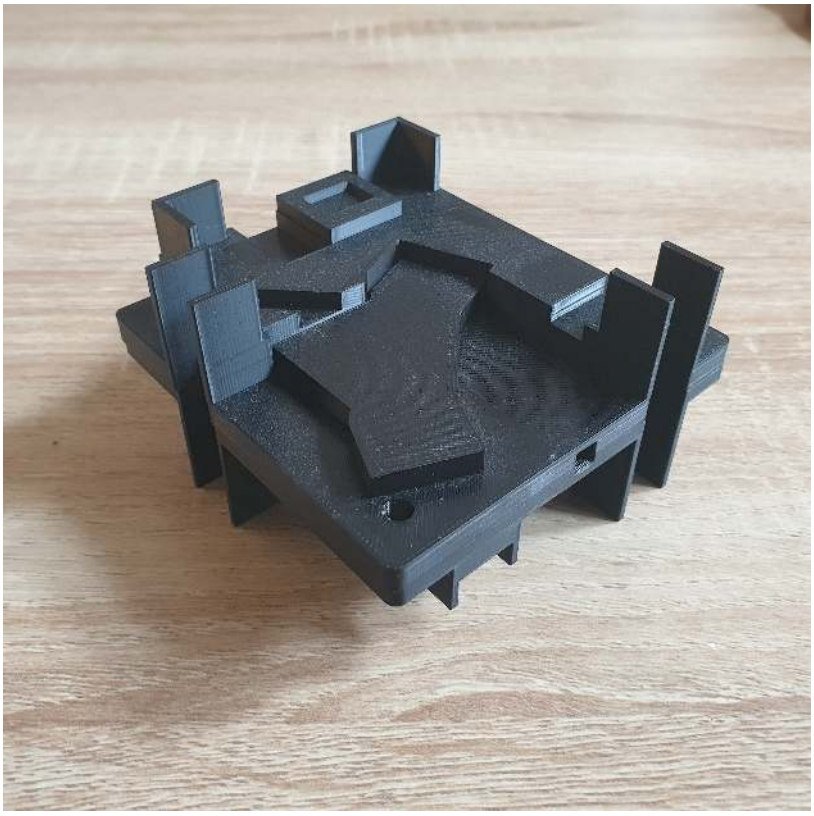

Fig. 3 The printed model: The CAD model was successfully printed into two parts, that can then be mounted together. The print only includes the base, not the components that would be attached to it.

4.2 Optical Bench

Preliminary experiments of a version of the design discussed had been setup in parallel to the CAD modelling and computational work that had been conducted. This bench was used for various preliminary tests. The first of which was characterising the beam shape. It was determined that an anamorphic prism pair was not required for the laser diode being used, and

was therefore removed from the design. The bench was then in the process of being prepared to detect photons from the pumped ppKTP crystal, and would have then been used to perform entanglement. Unfortunately, this was possible to conduct in time.

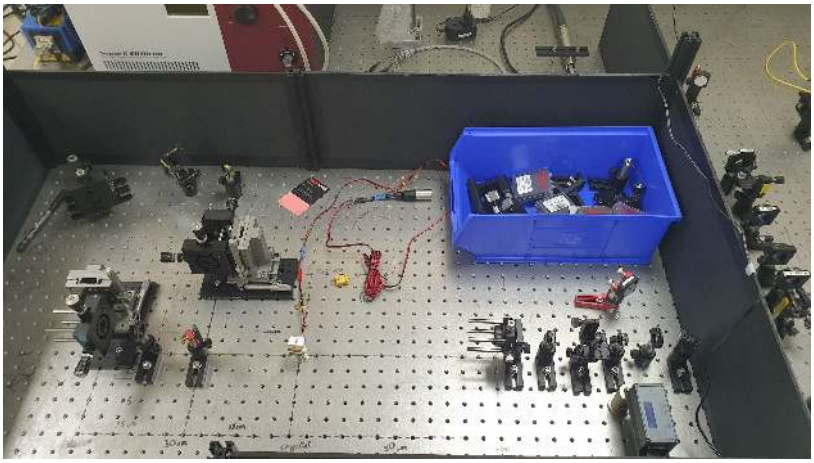

Fig. 4 The experimental setup used to aid the design of the CAD model: This bench was used for various preliminary tests. The first of which was characterising the beam shape. It was seen that an anamorphic prism pair was not required for the laser diode being used, and was therefore removed from the design. The bench was then being prepared to detect photons from the pumped ppKTP crystal.

4.3 Computational Model

Using the methodology detailed in 3.2, a python script was created that takes values for the efficiencies of two detectors in dB, and the polarisation error probability, to produce log-log plots of the secure key rate against brightness following equation 3.1, as seen in Fig. 5. The model matched the expected trend[25], showing peak secure key rates at 0.7 cps. The secure key rate values were far higher than was possible however. This is most likely caused by an error in the summation step when calculating secure key rate values, and should be a relatively simple fix. Once the model is working as expected, it can be verified against the experimental source being built on the optical bench.

5 Discussion

In summary, progress has been made on designing a future entanglement-based QKD system. A new revised design that iterates on previous work and takes input from observations made from the optics bench to produce a simpler system, and has been successfully 3D printed. The new design overcomes the flaws of the prior models. The design featured in Appendix

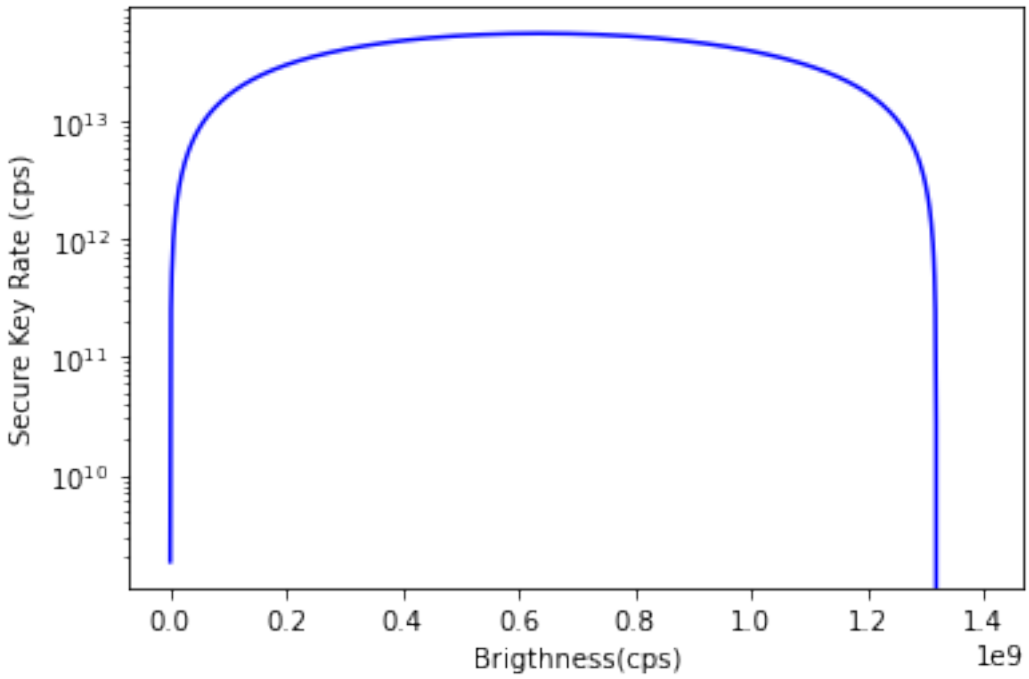

Fig. 5 Example log-log plot of secure key rate against brightness: This plot was obtained using assumed detector loss values of 20 dB and 30 dB with a polarisation measurement error of 5.35 and a coincidence window of 93 ps, in order to compare with previous models[25].

D represented a rough approximation of a QKD satellite subsystem. However, it relied on an overly complex set of lenses to keep a tight beam waist, due to both the difficulties in fitting the components in suitable locations, and inexperience in designing such a system. The model itself also had multiple issues that would have prevented it from being successfully 3D printed, such as overlapping and conflicting parts, and gaps located in some of the corners due to the model not being drawn correctly. The design in Appendix E fixed some of the issues with the model, and offered some improvements to the structure, such as larger diameter holes for the rail mount system, but still relied on a complex optical system. The new design presented here is a complete reworking of the prior system from the ground up, making use of the lessons learned from the earlier CAD drawings to create complete model that can be successfully printed. Furthermore, the new design incorporates more accurate models for the various components that will be mounted to it, thus creating a better representation of the final design.

6 Conclusion

Satellite-based QKD networks have the potential to revolutionise modern-day secure communication methods. The principles of quantum mechanics enable protocols that are much more

efficient than classical protocols and allow protocols that are even impossible to achieve in classical communication. With the more accessible nature of CubeSats in terms of cost and complexity, the pace at which orbital QKD research can be conducted could be vastly accelerated compared to using traditional satellites. The models developed for this paper aim to aid in that goal, by providing a base to be developed into a potential engineering model, and a software tool to refine its performance.

References

1. Anwar, A., Perumangatt, C., Villar, A., Lohrmann, A. & Ling, A. Development of compact entangled photon-pair sources for satellites. *Appl. Phys. Lett* **121,** 220503 (2022).
2. Shen, Y., Tang, X., Zhang, X., Zhou, Y. & Zou, H. A flexible continuous-wave quantum cryptography scheme with zero-trust security for Internet of Things. *International Journal of Distributed Sensor Networks* **18.** doi: 10.1177/15501329221136978, 15501329221136978 (11 Nov. 2022).
3. Zangi, S. M., Shukla, C., ur Rahman, A. & Zheng, B. Entanglement Swapping and Swapped Entanglement. *Entropy* **25,** 415 (3 Feb. 2023).
4. Takesue, H. *et al.* Quantum key distribution over a 40-dB channel loss using superconducting single-photon detectors. *Nature photonics* **1,** 343–348 (6 2007).
5. Rarity, J. G., R, T. P., Gorman, P. M. & Knight, P. Ground to satellite secure key exchange using quantum cryptography. *New Journal of Physics* **4** (82 Oct. 2002).
6. Liao, S.-K. *et al.* Satellite-Relayed Intercontinental Quantum Network. *Phys. Rev. Lett.* **120,** 30501 (3 Jan. 2018).
7. Podmore, H. *et al. QKD terminal for Canada's Quantum Encryption and Science Satellite (QEYSSat)* in (SPIE-Intl Soc Optical Eng, June 2021), 17.
8. Yin, J. *et al.* Entanglement-based secure quantum cryptography over 1,120 kilometres. *Nature* **582,** 501–505 (7813 June 2020).
9. Yin, J. *et al.* Satellite-based entanglement distribution over 1200 kilometers. *Science (American Association for the Advancement of Science)* **356,** 1140–1144 (6343 June 2017).
10. Cheng, C., Chandrasekara, R., Tan, Y. C. & Ling, A. Space-Qualified Nanosatellite Electronics Platform for Photon Pair Experiments. *Journal of Lightwave Technology* **33,** 4799–4804 (23 Dec. 2015).

11. De Brito, W. A. & Ramos, R. V. Quantum information technology with Sagnac interferometer: interaction-free measurement, quantum key distribution and quantum secret sharing. *Journal of Modern Optics* **55,** 1231–1241 (8 2008).

12. Bennink, R. S. Optimal collinear Gaussian beams for spontaneous parametric down-conversion. *Physical Review A - Atomic, Molecular, and Optical Physics* **81** (5 May 2010).

13. Jennewein, T., Simon, C., Weihs, G., Weinfurter, H. & Zeilinger, A. Quantum Cryptography with Entangled Photons. *Physical Review Letters* **84,** 4729–4732 (20 May 2000).

14. Pérez, A., Just, F., Cavanna, A., Chekhova, M. & Leuchs, G. Effects of anisotropy in a nonlinear crystal for squeezed vacuum generation. *Laser Physics Letters* **10** (July 2013).

15. Couteau, C. Spontaneous parametric down-conversion. *Contemporary Physics* **59.** doi: 10.1080/00107514.2018.1488463, 291–304 (3 July 2018).

16. He, G. S. *Nonlinear Optics and Photonics* 33–58 (Oxford University Press, Oct. 2014).

17. Lerch, S., Bessire, B., Bernhard, C., Feurer, T. & Stefanov, A. Tuning curve of type-0 spontaneous parametric down-conversion. *Journal of the Optical Society of America B* **30,** 953 (4 Mar. 2013).

18. Anwar, A., Perumangatt, C., Steinlechner, F., Jennewein, T. & Ling, A. Entangled photon-pair sources based on three-wave mixing in bulk crystals. *Review of Scientific Instruments* **92** (4 Apr. 2021).

19. Fedrizzi, A., Herbst, T., Poppe, A., Jennewein, T. & Zeilinger, A. A wavelength-tunable fiber-coupled source of narrowband entangled photons. *Optics Express* **15,** 15377–15386 (23 June 2007).

20. Steinlechner, F. *et al.* Efficient heralding of polarization-entangled photons from type-0 and type-II spontaneous parametric downconversion in periodically poled KTiOPO4. *JOSA B* **31** (May 2014).

21. Riegel, J., Mayer, W. & van Havre, Y. *FreeCAD* 2022.

22. Lodewyck, J. *GaussianBeam* 2013.

23. Ma, X., Fung, C.-H. F. & Lo, H.-K. Quantum key distribution with entangled photon sources. *Physical review. A, Atomic, molecular, and optical physics* **76** (1 Apr. 2007).

24. Neumann, S. P., Ribezzo, D., Bohmann, M. & Ursin, R. Experimentally optimizing QKD rates via nonlocal dispersion compensation. *Quantum Science and Technology* **6,** 25017 (2 Mar. 2021).

25. Neumann, S. P. *et al.* Model for optimizing quantum key distribution with continuous-wave pumped entangled-photon sources. *Physical Review A* **104** (2 Aug. 2021).

7 Acknowledgements

Thanks are due to Alexander Pickston for providing guidance and support throughout the project. His assistance had been invaluable for performing the 3D print, experimental work, coding support, and much more.

A Risk Assessment

Risk Assessment

(This is for example/training use only and is NOT a formal risk assessment document)

Activity title :	**Designing a Space-Grade QKD System**
Location :	**DB G.34 / Home**
Assessor :	**Faris Redza**
Date Assessed :	**7/10/2022**

Risk Analysis Matrix Level of Risk						Likelihood	Severity
Likelihood	4	4	8	12	16	1. Unlikely	1. Insignificant/No Injury
	3	3	6	9	12	2. Possible	2. Minor Injury
	2	2	4	6	8	3. Likely	3. Moderate Injury
	1	1	2	3	4	4. Certain	4. Major Injury/Fatality
×		1	2	3	4	*Score likelihood*	*Score severity*
		Severity					

Hazard	Persons Affected	**Likelihood** of incident	Potential **Severity**	**Risk control already in place**	**RISK ASSESSMENT**	**Further Action required to control risk**
Display Screen Equipment (DSE)	• Staff risk posture problems and pain, discomfort or injuries, eg to their hands/arm, from overuse or improper use or from poorly designed workstations or work environments. • Headaches or sore eyes can also occur, eg if lighting is poor.	1	2	• Workstation and equipment set to ensure good posture and to avoid glare and reflections on the screen. • Include regular breaks or change of activity, such as walking. • Lighting and temperature suitably controlled. • Adjustable blinds at window to control natural light on screen. • Enable “night mode” or equivalent feature on display to reduce blue light	2	• Use footrest to improve posture • Use wrist support to improve posture • Position top of screen to be at eye level

B Gannt Chart

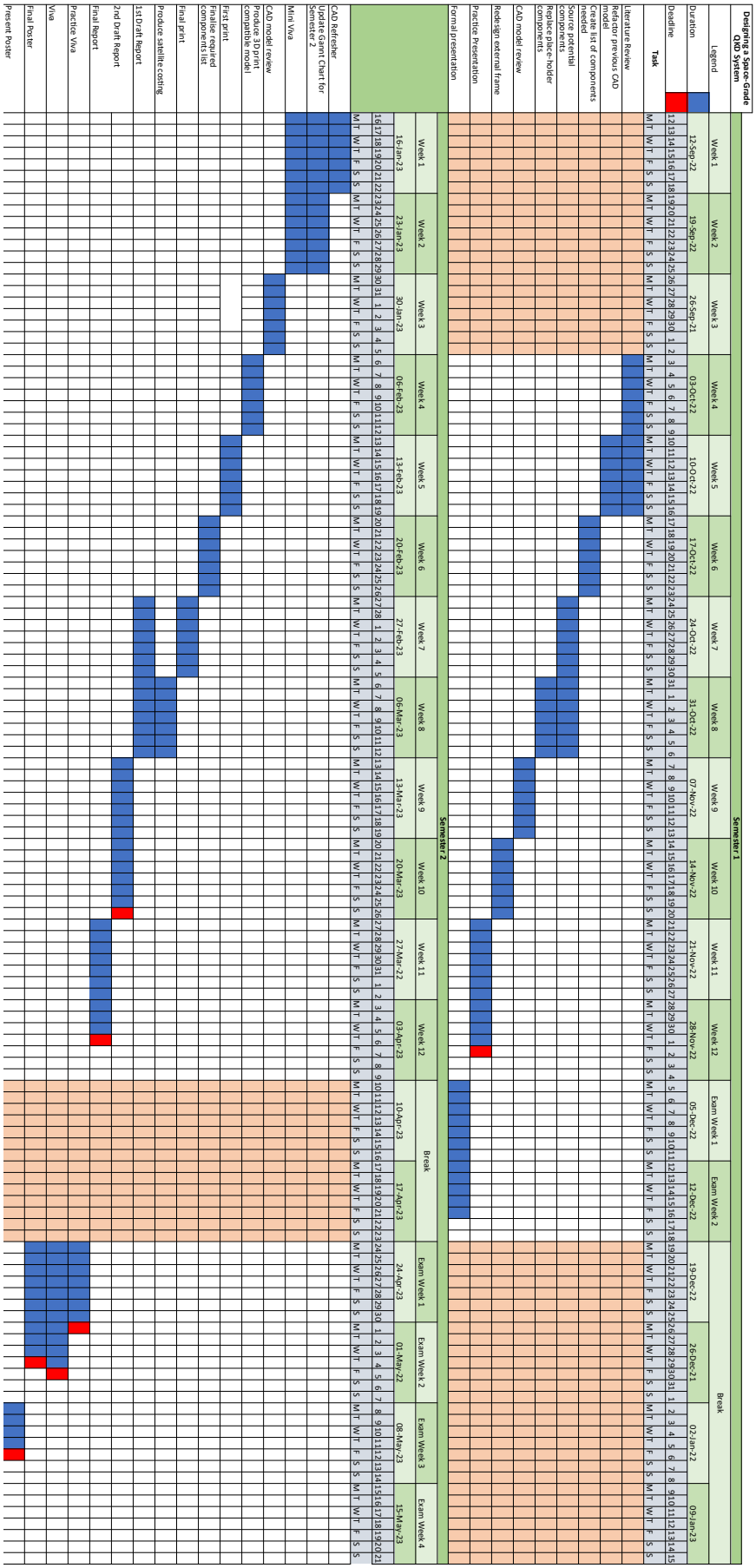

C Additional Design Images

Fig. 6 Overview of the printed model: The model is designed as two separate sections, that are mounted together. The optical components will then be glued on.

Fig. 7 Hollow section of the model: The model features a hollow section formed when the two sides are mounted together. This section will house a peltier tile heating element.

D Year 4 Project CAD Model

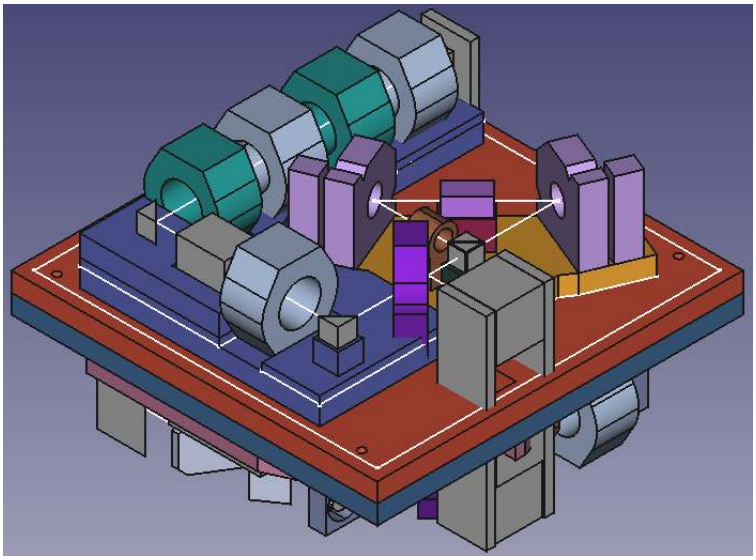

Fig. 8 Top side of the Year 4 project model

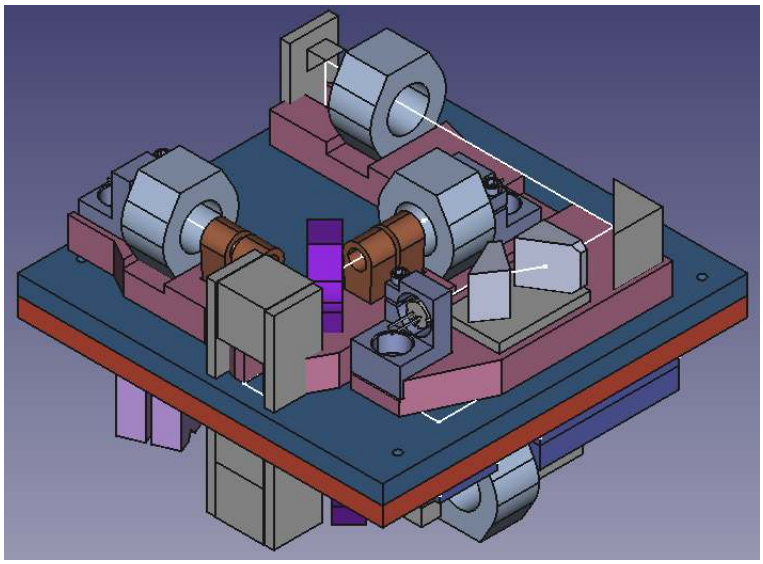

Fig. 9 Bottom side of the Year 4 project model

E Summer Project CAD Model

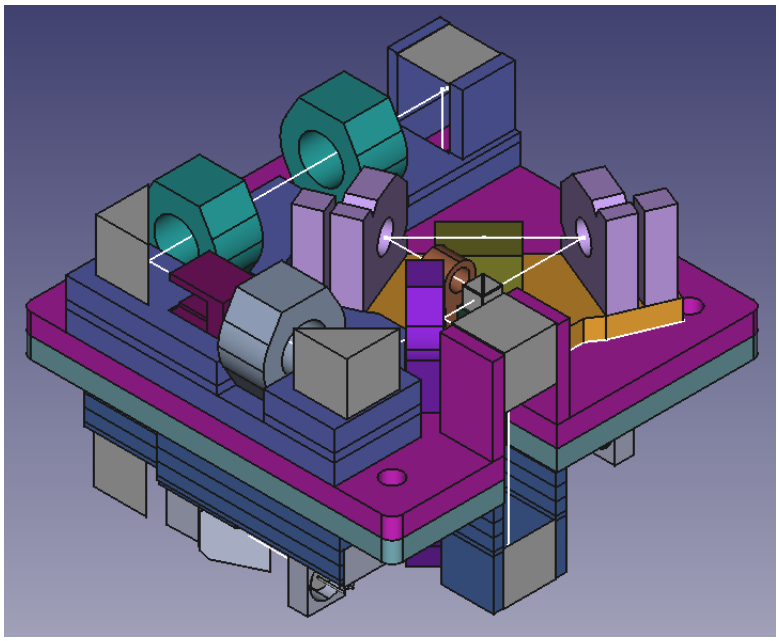

Fig. 10 Top side of the summer project model

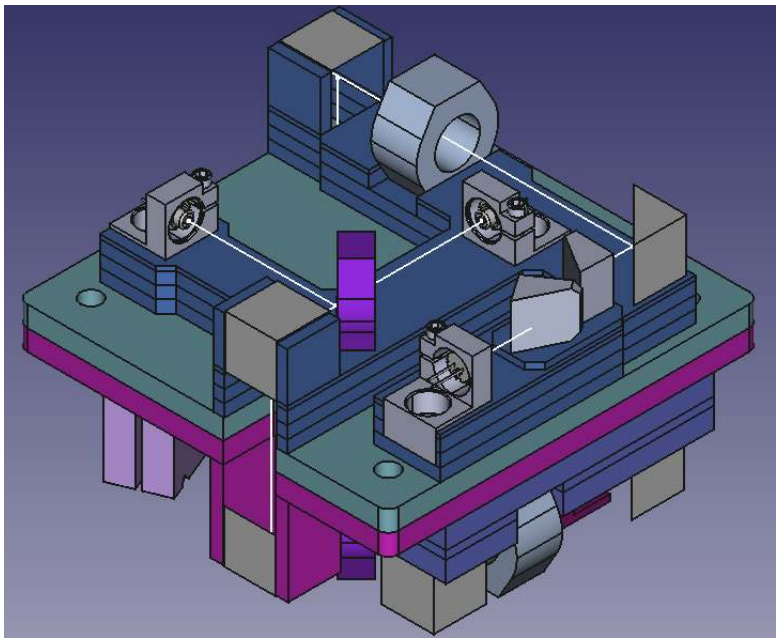

Fig. 11 Bottom side of the summer project model